HSF

NOTES:
Rated Current:1.5AMP.(20℃,1*2P-1*15P)
1.0AMP.(20℃,1*16P-1*50P) A3
Contact Resistance: 20mΩ Max.
Withstand Voltage: 500V AC/DC
Insulation Resistance: 1000MΩ Min.
Operation Temperature:-40℃ to +125℃(Gold Plating)
-40℃ to +105℃(Tin Plating) A3
Contact Material:Copper Alloy
Contact Plating:Au or Sn Over 30u" Min Ni
Insulator Material:PA9T+G.F UL94V-0 BK A3

Ordering Information

1317-2 1 XX XX M XXX C X XX A3

- Plastic Layer
- Plastic Row
- No.of Pins Per Row:02~50
- Contact Plating
  G0=Gold Flash
  G3=10u"Au, BG3=8u"PdNi+2u"Au
  G4=15u"Au, BG4=13u"PdNi+2u"Au
  G5=30u"Au, BG5=28u"PdNi+2u"Au
  S0=Gold Flash/Tin
  S3=10u"Au/Sn, P3=8u"PdNi+2u"Au/Sn
  S4=15u"Au/Sn, P4=13u"PdNi+2u"Au/Sn
  S5=30u"Au/Sn, P5=28u"PdNi+2u"Au/Sn
  SN=Bright Tin
  SM=Matte Tin
- Type: M=SMT
- Pin Length L(See Table)
- Insulator Material C=PA9T(Standard)
- Packing T=Tube P=Tube+CAP R=Tape &Reel+CAP
- Series No. 01~99

Item	Pin Lenght	W	C	E	D	B	Mating
Standard	8.2	4.5	4.0	4.56	0.1	2.0	2321/2320T
	9.3					3.0	2334/2344/2346
	9.8					3.5	2357
	10.8					4.5	2345/2385
Alternate							

A3

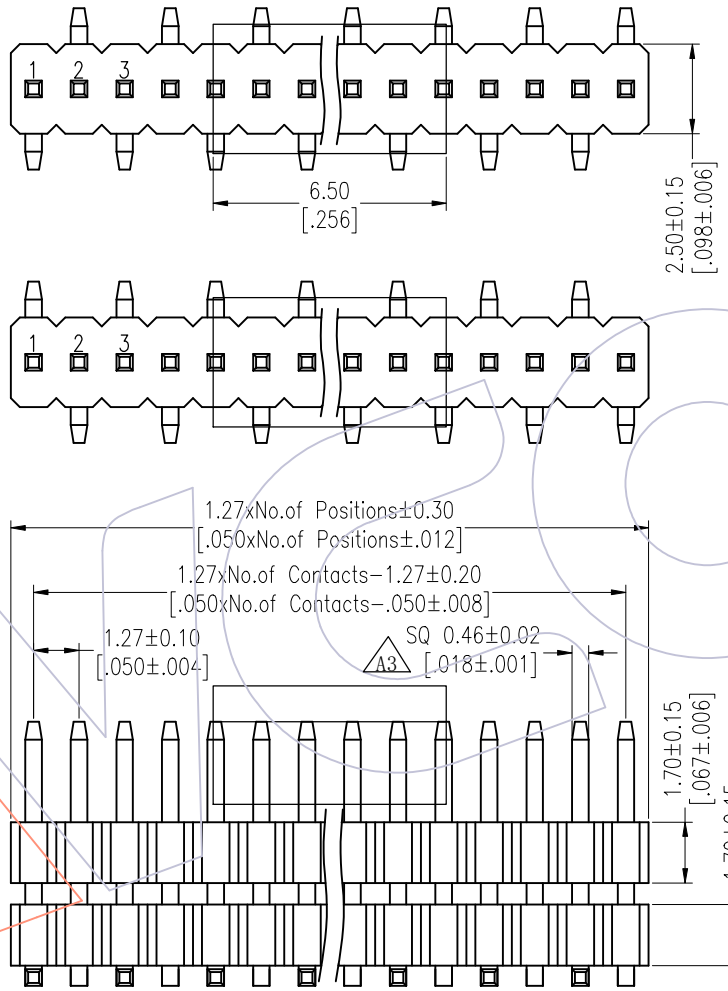

Recommended P.C.B Layout (Top Side)
(PCB BOARD TOLERANCE±0.05)
(PCB Thickness:T=1.60m)

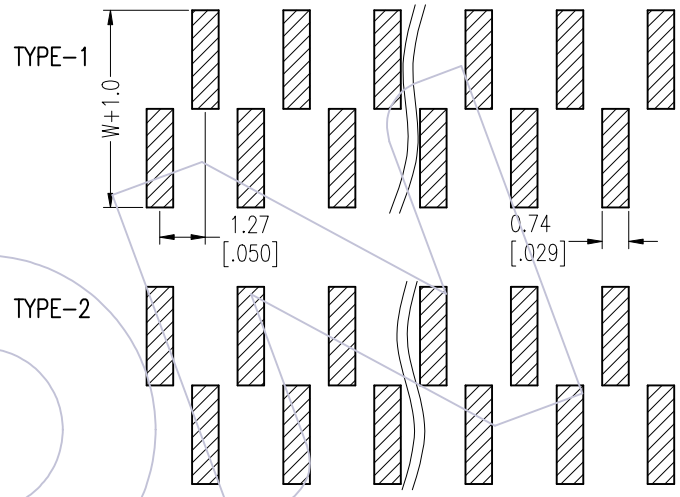

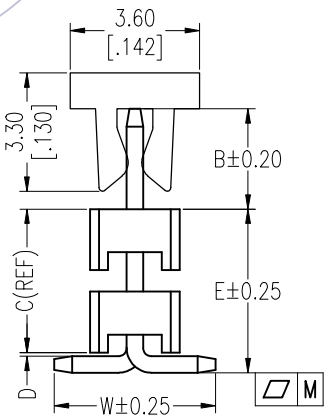

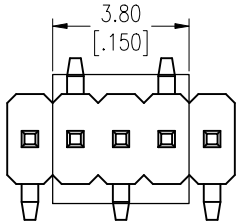

2~5PIN

PIN(PerRow)	2-15P	16-30P	31-50P
M	0.10	0.15	0.18

A2

REV	DATE	MODIFICATION DESCRIPTION	CHANGE
A3	2025/08/15	Standardization Drawing	CP
A2	2023/02/02	Add Flatness	Du Ying
A1	2018/01/17	MODIFY PART NO.	William Chen
A0	2012/03/16	NEW	William Chen

OPERATION	
X.X	±0.40
X.XX	±0.25
X.XXX	±0.15
Angle	± 3°
DIM	TOL

DRAW	CP	DATE	2025/08/15
CHECK	TANG	DATE	2025/08/15
APPROVE	Steven Zhao	DATE	2025/08/15

SCALE	Fit
UNIT	mm [inch]
SIZE	A4
SHEET	1/4
PROJ.	

PART NO. 1317-21XXXXMXXXCXXX A1

TITLE: 1.27 Pin Header, SINGLE ROW, SMT, DOUBLE PLASTIC, H=1.7

Customer NO.

WCON
Http: www.wcon.com
WCON-Dongguan
Tel: +86 769 85358920
Fax: +86 769 85358915
E-mail: sales@wcon.com
WCON-Kunshan
Tel: +86 512 57468408
Fax: +86 512 57468468
E-mail: salesks@wcon.com

HSF

Packing:

Tube:

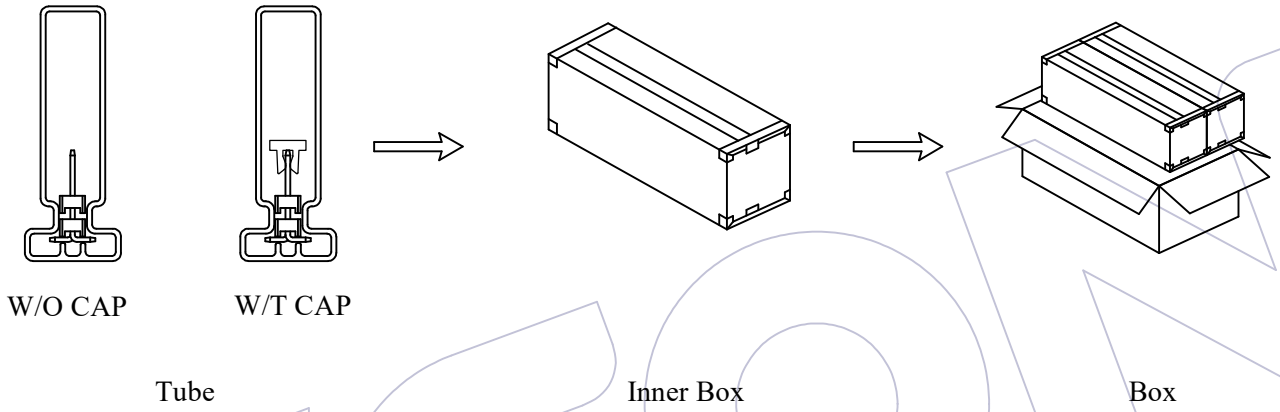

Reel:

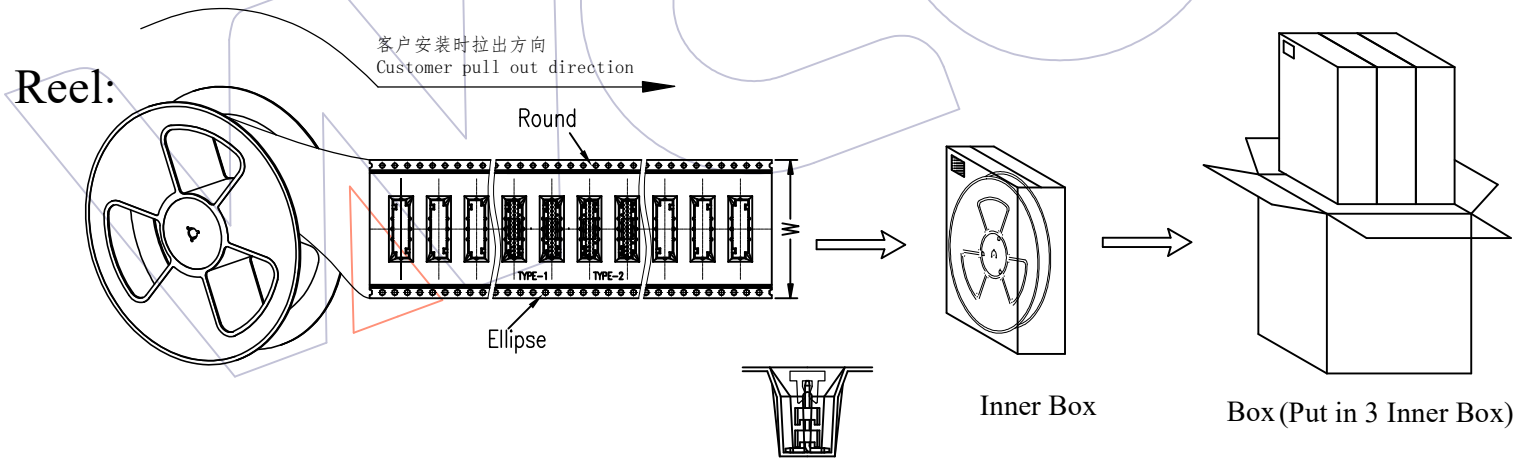

REV	DATE	MODIFICATION DESCRIPTION	CHANGE
A3	2025/08/15	Standardization Drawing	CP
A2	2023/02/02	Add Flatness	Du Ying
A1	2018/01/17	MODIFY PART NO.	William Chen
A0	2012/03/16	NEW	William Chen

OPERATION	
X.X	±0.40
X.XX	±0.25
X.XXX	±0.15
Angle	± 3°
DIM	TOL

DRAW	CP	DATE	2025/08/15
CHECK	TANG	DATE	2025/08/15
APPROVE	Steven Zhao	DATE	2025/08/15

SCALE	Fit
UNIT	mm [inch]
SIZE	A4
SHEET	2/4
PROJ.	

PART NO. 1317-21XXXXMXXXCXXX A1

TITLE: 1.27 Pin Header, SINGLE ROW, SMT, DOUBLE PLASTIC, H=1.7

Customer NO.

WCON
Http: www.wcon.com

WCON-Dongguan
Tel: +86 769 85358920
Fax: +86 769 85358915
E-mail: sales@wcon.com

WCON-Kunshan
Tel: +86 512 57468408
Fax: +86 512 57468468
E-mail: salesks@wcon.com

HSF

Packaging Quantity Refers To The Following Table

PINS	Q'ty/Tube	Q'ty/Inner Box	Q'ty/Box
4	107	8,560	17,120
5	87	6,960	13,920
6	73	5,840	11,680
7	63	5,040	10,080
8	55	4,400	8,800
9	49	3,920	7,840
10	44	3,520	7,040
11	40	3,200	6,400
12	37	2,960	5,920
13	34	2,720	5,440
14	32	2,560	5,120
15	29	2,320	4,640
16	28	2,240	4,480
17	26	2,080	4,160
18	25	2,000	4,000
19	23	1,840	3,680
20	22	1,760	3,520
21	21	1,680	3,360
22	20	1,600	3,200
23	19	1,520	3,040
24	18	1,440	2,880
25	18	1,440	2,880
26	17	1,360	2,720
27	16	1,280	2,560

PINS	Q'ty/Tube	Q'ty/Inner Box	Q'ty/Box
28	16	1,280	2,560
29	15	1,200	2,400
30	15	1,200	2,400
31	14	1,120	2,240
32	14	1,120	2,240
33	13	1,040	2,080
34	13	1,040	2,080
35	12	960	1,920
36	12	960	1,920
37	12	960	1,920
38	11	880	1,760
39	11	880	1,760
40	11	880	1,760
41	11	880	1,760
42	10	800	1,600
43	10	800	1,600
44	10	800	1,600
45	10	800	1,600
46	9	720	1,440
47	9	720	1,440
48	9	720	1,440
49	9	720	1,440
50	9	720	1,440

B=2.0/3.0

PINS	W	Q'ty/Reel	Q'ty/Inner Box	Q'ty/Box
2	12	600	3,600	10,800
3	16	600	2,400	7,200
4	24	600	1,800	5,400
5	24	600	1,800	5,400
6	24	600	1,800	5,400
7	24	600	1,800	5,400
8	24	600	1,800	5,400
9	24	600	1,800	5,400
10	24	600	1,800	5,400
11	32	600	1,200	3,600
12	32	600	1,200	3,600
13	32	600	1,200	3,600
14	44	600	1,200	3,600
15	44	600	1,200	3,600
16	44	600	1,200	3,600
17	44	600	1,200	3,600
18	44	600	1,200	3,600
19	44	600	1,200	3,600
20	44	600	1,200	3,600
21	44	600	1,200	3,600
22	44	600	1,200	3,600
23	56	600	600	1,800
24	56	600	600	1,800
25	56	600	600	1,800
26	56	600	600	1,800

B=2.0/3.0

PINS	W	Q'ty/Reel	Q'ty/Inner Box	Q'ty/Box
27	56	600	600	1,800
28	56	600	600	1,800
29	56	600	600	1,800
30	56	600	600	1,800
31	56	600	600	1,800
32	56	600	600	1,800
33	72	600	600	1,800
34	72	600	600	1,800
35	72	600	600	1,800
36	72	600	600	1,800
37	72	600	600	1,800
38	72	600	600	1,800
39	72	600	600	1,800
40	72	600	600	1,800
41	72	600	600	1,800
42	72	600	600	1,800
43	72	600	600	1,800
44	72	600	600	1,800
45	88	600	600	1,800
46	88	600	600	1,800
47	88	600	600	1,800
48	88	600	600	1,800
49	88	600	600	1,800
50	88	600	600	1,800

REV	DATE	MODIFICATION DESCRIPTION	CHANGE
A3	2025/08/15	Standardization Drawing	CP
A2	2023/02/02	Add Flatness	Du Ying
A1	2018/01/17	MODIFY PART NO.	William Chen
A0	2012/03/16	NEW	William Chen

OPERATION	
X.X	±0.40
X.XX	±0.25
X.XXX	±0.15
Angle	± 3°
DIM	TOL

DRAW	CP	DATE	2025/08/15
CHECK	TANG	DATE	2025/08/15
APPROVE	Steven Zhao	DATE	2025/08/15

SCALE	Fit
UNIT	mm [inch]
SIZE	A4
SHEET	3/4
PROJ.	

PART NO. 1317-21XXXXMXXXCXXX A1

TITLE: 1.27 Pin Header, SINGLE ROW, SMT, DOUBLE PLASTIC, H=1.7

Customer NO.

WCON
Http: www.wcon.com
WCON-Dongguan
Tel: +86 769 85358920
Fax: +86 769 85358915
E-mail: sales@wcon.com
WCON-Kunshan
Tel: +86 512 57468408
Fax: +86 512 57468468
E-mail: salesks@wcon.com

HSF

Packaging Quantity Refers To The Following Table

B=3.5

PINS	W	Q'ty/Reel	Q'ty/Inner Box	Q'ty/Box
2	16	550	2,200	6,600
3	16	550	2,200	6,600
4	24	550	1,650	4,950
5	24	550	1,650	4,950
6	24	550	1,650	4,950
7	24	550	1,650	4,950
8	24	550	1,650	4,950
9	24	550	1,650	4,950
10	32	550	1,100	3,300
11	32	550	1,100	3,300
12	32	550	1,100	3,300
13	44	550	1,100	3,300
14	44	550	1,100	3,300
15	44	550	1,100	3,300
16	44	550	1,100	3,300
17	44	550	1,100	3,300
18	44	550	1,100	3,300
19	44	550	1,100	3,300
20	44	550	1,100	3,300
21	44	550	1,100	3,300
22	44	550	1,100	3,300
23	56	550	550	1,650
24	56	550	550	1,650
25	56	550	550	1,650
26	56	550	550	1,650

B=3.5

PINS	W	Q'ty/Reel	Q'ty/Inner Box	Q'ty/Box
27	56	550	550	1,650
28	56	550	550	1,650
29	56	550	550	1,650
30	56	550	550	1,650
31	56	550	550	1,650
32	72	550	550	1,650
33	72	550	550	1,650
34	72	550	550	1,650
35	72	550	550	1,650
36	72	550	550	1,650
37	72	550	550	1,650
38	72	550	550	1,650
39	72	550	550	1,650
40	72	550	550	1,650
41	72	550	550	1,650
42	72	550	550	1,650
43	72	550	550	1,650
44	72	550	550	1,650
45	88	550	550	1,650
46	88	550	550	1,650
47	88	550	550	1,650
48	88	550	550	1,650
49	88	550	550	1,650
50	88	550	550	1,650

B=4.5

PINS	W	Q'ty/Reel	Q'ty/Inner Box	Q'ty/Box
2	16	500	2,000	6,000
3	24	500	1,500	4,500
4	24	500	1,500	4,500
5	24	500	1,500	4,500
6	24	500	1,500	4,500
7	24	500	1,500	4,500
8	24	500	1,500	4,500
9	32	500	1,000	3,000
10	32	500	1,000	3,000
11	32	500	1,000	3,000
12	44	500	1,000	3,000
13	44	500	1,000	3,000
14	44	500	1,000	3,000
15	44	500	1,000	3,000
16	44	500	1,000	3,000
17	44	500	1,000	3,000
18	44	500	1,000	3,000
19	44	500	1,000	3,000
20	44	500	1,000	3,000
21	44	500	1,000	3,000
22	56	500	500	1,500
23	56	500	500	1,500
24	56	500	500	1,500
25	56	500	500	1,500
26	56	500	500	1,500

B=4.5

PINS	W	Q'ty/Reel	Q'ty/Inner Box	Q'ty/Box
27	56	500	500	1,500
28	56	500	500	1,500
29	56	500	500	1,500
30	56	500	500	1,500
31	72	500	500	1,500
32	72	500	500	1,500
33	72	500	500	1,500
34	72	500	500	1,500
35	72	500	500	1,500
36	72	500	500	1,500
37	72	500	500	1,500
38	72	500	500	1,500
39	72	500	500	1,500
40	72	500	500	1,500
41	72	500	500	1,500
42	72	500	500	1,500
43	72	500	500	1,500
44	88	500	500	1,500
45	88	500	500	1,500
46	88	500	500	1,500
47	88	500	500	1,500
48	88	500	500	1,500
49	88	500	500	1,500
50	88	500	500	1,500

REV	DATE	MODIFICATION DESCRIPTION	CHANGE
A3	2025/08/15	Standardization Drawing	CP
A2	2023/02/02	Add Flatness	Du Ying
A1	2018/01/17	MODIFY PART NO.	William Chen
A0	2012/03/16	NEW	William Chen

OPERATION	
X.X	±0.40
X.XX	±0.25
X.XXX	±0.15
Angle	± 3°
DIM	TOL

DRAW	CP	DATE	2025/08/15
CHECK	TANG	DATE	2025/08/15
APPROVE	Steven Zhao	DATE	2025/08/15

SCALE	Fit
UNIT	mm [inch]
SIZE	A4
SHEET	4/4
PROJ.	

PART NO. 1317-21XXXXMXXXCXXX A1

TITLE: 1.27 Pin Header, SINGLE ROW, SMT, DOUBLE PLASTIC, H=1.7

Customer NO.

WCON
Http: www.wcon.com
WCON-Dongguan
Tel: +86 769 85358920
Fax: +86 769 85358915
E-mail: sales@wcon.com
WCON-Kunshan
Tel: +86 512 57468408
Fax: +86 512 57468468
E-mail: salesks@wcon.com